

NoviPanel

HPL Panels

CONTENTS

General information	3
Transportation, packaging and storage	4
Edit	5
Ventilation and deflection	6
Mounting instructions (torx screws)	7
Mounting instructions (glue)	10

GENERAL INFORMATION

Features

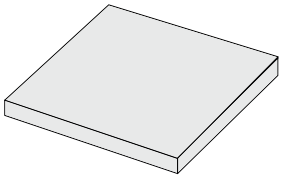

High Pressure Laminate (HPL) is produced by bringing together a combination of thermosetting, resin and kraft paper under high pressure and temperature. With proven excellent outdoor performance that meets the high European standard.

Our HPL panels are available in various thicknesses and colors. Novipanel's HPL panels are also produced phenol-free and contain only FSC-certified paper.

Imo Med (marine)

CE (construction)

Volatile Organic Compounds Emissions Certification (Class A+)

Phenolfree

Ask for FSC® certified product

Applications

Because of the material's strength and durability, HPL panels are often used as cladding in residential, commercial and recreational construction. The smooth material is well suited for making fascias, eaves and dormers. HPL is also a good material for billpanels and signing. In addition to exterior applications, HPL can also be used indoors, for example in bathrooms and kitchens.

Specifications

Double-sided HPL board of European quality. Tested according to European standard EN 438-2:2016. Produced 100% phenol-free using only FCS certified paper (sourced from responsibly managed forests). Available in different thicknesses and colors.

Cleaning

HPL panels are best cleaned with water and a mild detergent. Do not use solvents or abrasive cleaners. Do not allow the detergent to remain on the surface for long periods of time and always rinse the HPL panel thoroughly with clean water.

TRANSPORT, PACKAGING AND STORAGE

Transport

During transport, use stable pallets that are at least the same size as the HPL panels. We additionally recommend tying each pallet individually with a strap. Use a forklift for loading and unloading the pallets. Make sure that the panels do not slide over each other during loading and unloading. It is best to lift the panels one at a time to avoid surface damage.
If the panels are picked up from our warehouse, they must be transported horizontally on a flat surface.

Packaging

The HPL panels are packed on pallets and may have protective film. Remove any protective film before assembly and peel off the film on both sides at the same time to prevent warping.

Prevent damage

To avoid damage, do not slide the HPL panels on top and bottom of each other. Avoid contact between the panels and sharp or hard objects. Always check the HPL panels before installation.

Storage

- The panels should be stored in an enclosed dry room under normal climatic conditions.
- Preferably store the panels indoors or outside under a shelter. Avoid storage in the sun. Avoid contact between the film and other heat sources. Exposure to sunlight or heat may cause any protective film to permanently adhere to the panel.
- Avoid storage in the rain and standing water on the panels or film to prevent warping.
- Store the panels horizontally and fully supported. If this method of storage is not possible, the panels can be placed at an angle of 60° to 70°. Also, the total surface should be supported at all times.
- A protective panel should be placed on the top panel and between the pallet and the bottom panel.
- Under the influence of humidity, the panels may shrink or expand slightly. Therefore, store the panels for at least 72 hours before installation at the location of application.
- Improper storage can lead to permanent deformation of the panels.
- The weight of the stacked pallets should not exceed 1500 kg.

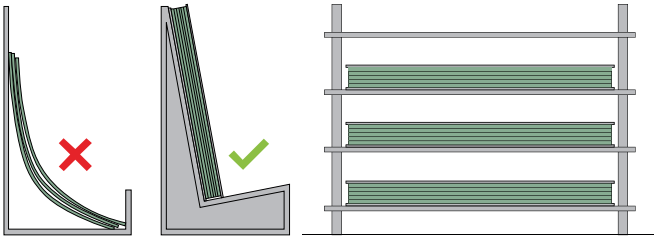

Check

Upon delivery, check the HPL panels for irregularities, such as shipping damage, manufacturing defects, etc. Also after removing the protective film prior to installation, check the panels carefully.

EDIT

CNC

For optimal finishing of the HPL panels, you can use a CNC machine. This computer-controlled machine drills and mills out fully automatic and very accurately.



Drilling

Place the HPL panel on hardwood or plywood during drilling to avoid splintery drill holes. Usually a spiral drill bit (HSS) or cobalt drill bit is used for drilling, with a 60 -80o widia point and an angle of ≤ 90°. For making larger holes, for example for hardware or a dowel, a drill bit with a centering point is most suitable. To prevent cracking, round off the inner edges of the drill holes to a radius of at least 8 mm.

Milling

You can use carbide cutters, in combination with a hand router or a fixed router table. By machining and rounding the edges of the HPL panel, you ensure a tight finish and reduce the change of damaging the edges.



Sawing

HPL panels can be cut with the following tools:

Circular saw

For best cutting results, we recommend using a fixed saw table with circular saw. In doing so, it is important to use a high stand, for example a (negatively ground) trapezoidal tooth.

- Saw blade diameter mm 303
- Machine speed rpm > 4000
- Saw clearance to plate 15 mm.
- Saw blade thickness mm 3.2
- Number of saw teeth - > 96
- Distance between teeth mm 13 - 15
- Hardness of the metal - H20

Pay attention to this while sawing:

- Make sure the saw blade is sharp;
- Point the sight side of the panel upward;
- Adjust the saw blade to the correct height;
- Press the plate next to the saw blade firmly;
- If possible, use a so-called “pre-zipper.

Jigsaw

To make cutouts in the HPL panels, use a jigsaw with upward cutting direction. Use only hardened steel saw blades with a medium tooth size.

Note

It is important to always drill out or round milling inside corners. They should not be cut out straight. The visible side of the HPL panels should face downward during sawing.

VENTILATION AND DEFLECTION

Ventilation

It is very important to provide continuous ventilation behind the wall panels with a minimum depth of 22 mm. With a horizontal substructure, you must provide ventilation openings at the top and bottom. With a vertical substructure, this is not necessary.

Deflection

It is extremely important to calculate with a static load of 600 N/mm2, for both wind suction and wind pressure. This will prevent excessive deflection, which can cause the facade system to fail.

Substructure advice

Behind HPL facade cladding, provide a continuous ventilation in the vertical direction with a minimum depth of 20 mm.
The size of the ventilation opening is determined by the height of the facade:

- 0 to 5 meters 20 cm2 per m1
- 5 to 10 meters 50 cm2 per m1
- 10 to 20 meters 70 cm2 per m1

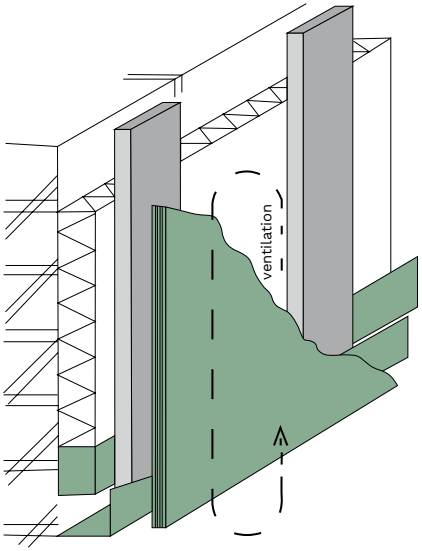

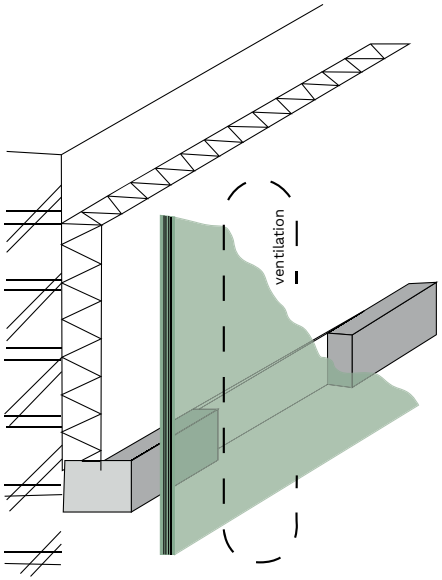

MOUNTING INSTRUCTIONS (TORX SCREWS)

Mounting torx screws

Fixing HPL panels with torx screws requires extreme care. The coefficients of expansion, hardness of the panels, temperatures and other factors have great influence on the mounting of HPL panels.
The following points are very important:

- Check the panels for inaccuracies before mounting.
- The joints between the panels should be at least 10 mm.
- For ventilation reasons, there should be a minimum space of 22 mm between the HPL panel and the back wall. The sides of the structure should not be closed (completely) to keep air circulation possible. This will prevent rotting, mold and de-lamination. Ventilation should be possible at the roof trim and fascia.
- Never drill the holes for the HPL screws smaller than the minimum diameter of 5 mm. At places that catch a lot of wind or experience increased turbulence, we recommend to reduce the shown maximums.
- Use high-quality stainless steel torx screws fitted with a ball head. The use of stainless steel countersunk head screws is only recommended in combination with bead washers or rosettes. This prevents deflections and corroded screws. The recommended dimensions of the screws are 4.8x32 mm or 4.8x45 mm.
- Use sturdy back frames made of high-quality wood or metal. Metal back frames require different screws.
- After tightening the screws, loosen them a quarter turn to ensure the sliding function.

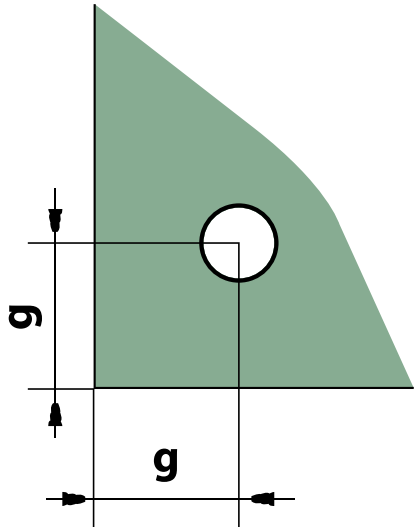

Compact (mm)	**g** (mm) min. max.
4,5	20 - 45
6	20 - 60
8	20 - 80
10	20 - 100

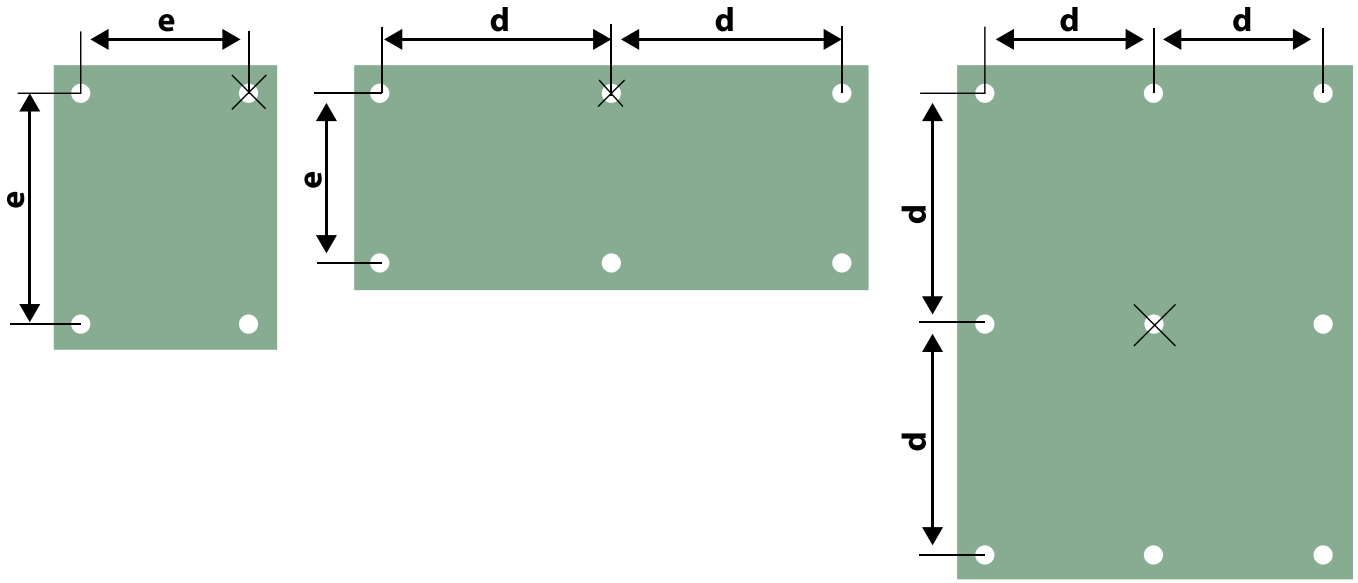

	2 attachments on one side	3 or more attachments on one side
Compact (mm)	e max. (mm)	d max. (mm)
4,5	300	300
6	450	600
8	600	750
10	750	900

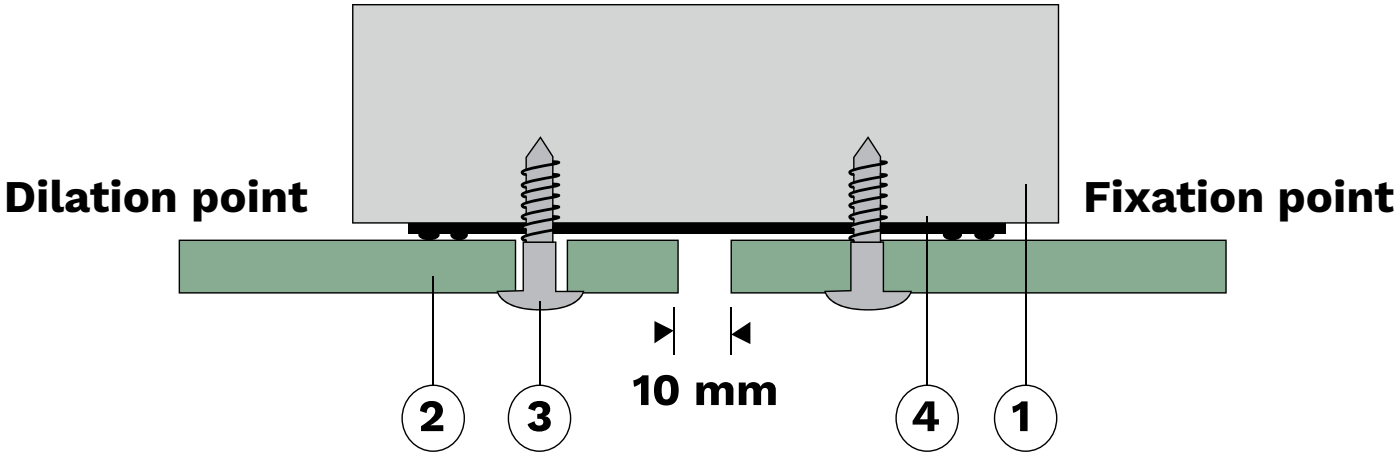

Fixation Point
Thread diameter + 0.1 mm = Ø 5 mm

Dilation point
Thread diameter x 1.7 mm = Ø 8 mm

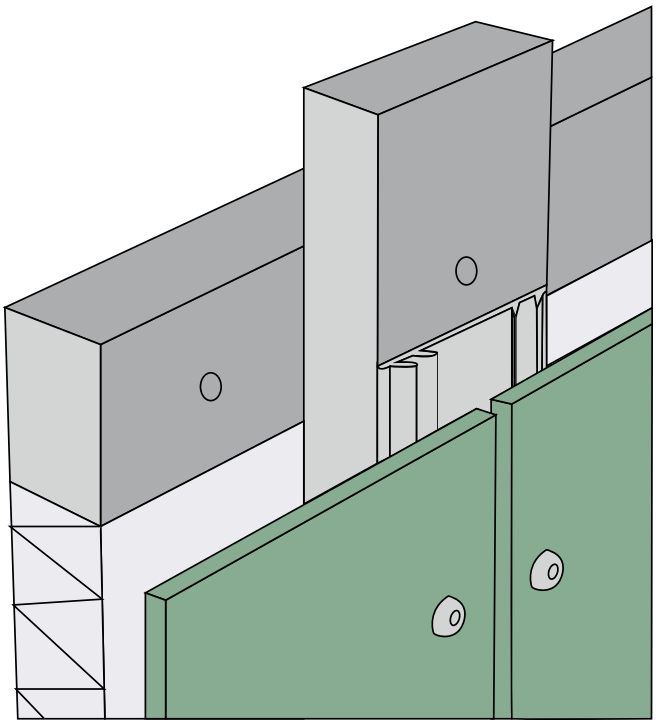

1. Substructure
2. HPL panel
3. Torx screw
4. Joint tape

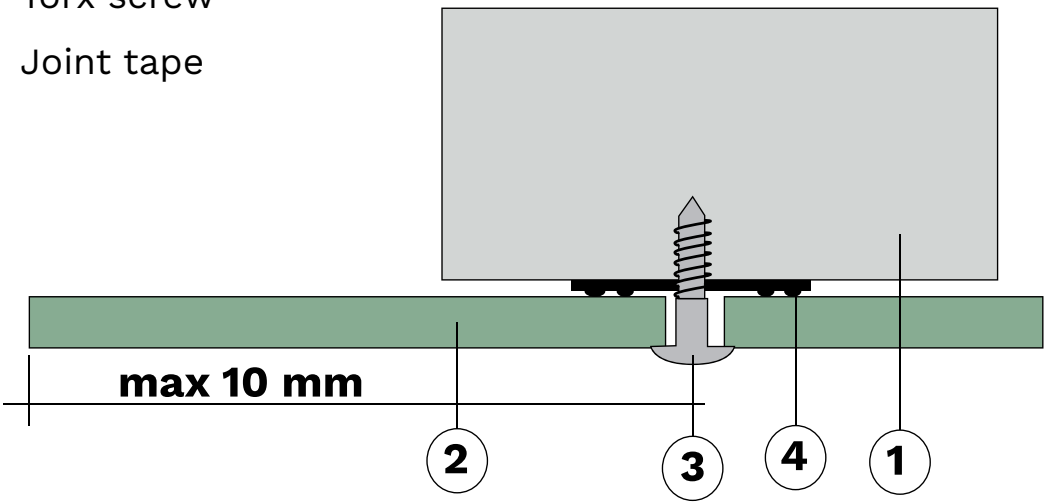

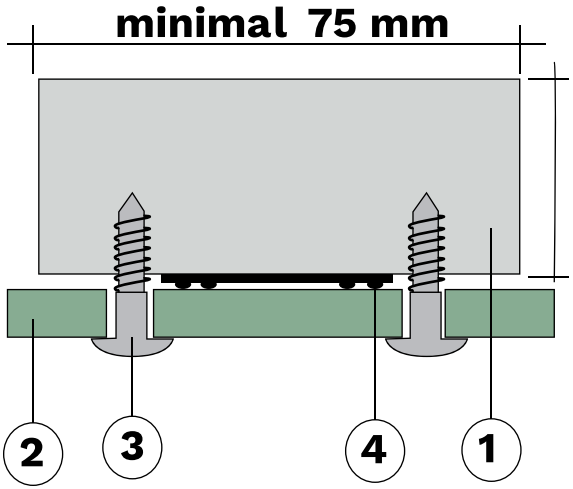

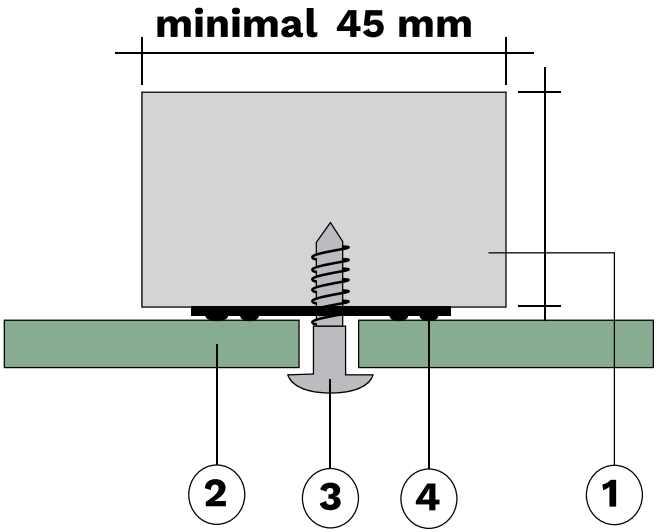

MOUNTING INSTRUCTIONS (GLUE)

Fixing adhesive

By gluing HPL panels, you can fix the panels blind. This gives a perfect end result. It is important to be meticulous and take into account some important factors. It is recommended to use a professional application company for this process.

Important factors

Materials:
- Condition and storage of panel materials.
- Shelf life and quality of the glue.

Substructure

- Strong and sound construction
- Flatness and position of the substructure
- Ventilation space and correct dimensions
- Wood moisture content of the battens (maximum 15%)
- The battens must be clean, dust- and grease-free.
- Do not use wooden battens with loose or missing knots in the substructure.
- Weather forecast during installation: Temperature between 8 °C and 35 °C
- Do not install in damp conditions such as fog, rain and dew
- Maximum humidity is 70%
- The outside temperature should not fall below 8°C for approx. 5 hours after bonding.

Processing Procedure

- Pretreating substructure
- Use primers
- Apply adhesive tapes
- Remove any protective film from the panels
- Position panels and glue within 10 minutes

Cleaning

For optimal adhesion, we recommend cleaning the HPL panels and the substructure with a special cleaner prior to installation. Cleaners are available in many qualities and variations.

Treating substructure

For optimal adhesion, it is important to prevent moisture penetration. Therefore, always use the recommended primers and treat the substructure with them before installation. Shake the primer well and if necessary apply with a paint roller (10 cm). Pay attention to the drying time of the primer and do not prepare more than necessary.

Apply tape or EPDM joint tape

The application of double-sided tape provides initial adhesion of the HPL panels during the drying of the adhesive. The EPDM joint tape protects against moisture and provides a minimum and necessary height of the adhesive bead.

Applying the glue

For bonding HPL panels, we recommend the use of Novipanel Montagekit. This sealant is reliable, mildew resistant and hardens quickly. In addition, the sealant is odorless and paintable.

Important

Novipanel recommends mounting the HPL panels not only with glue, but also with at least 2 fixing points.

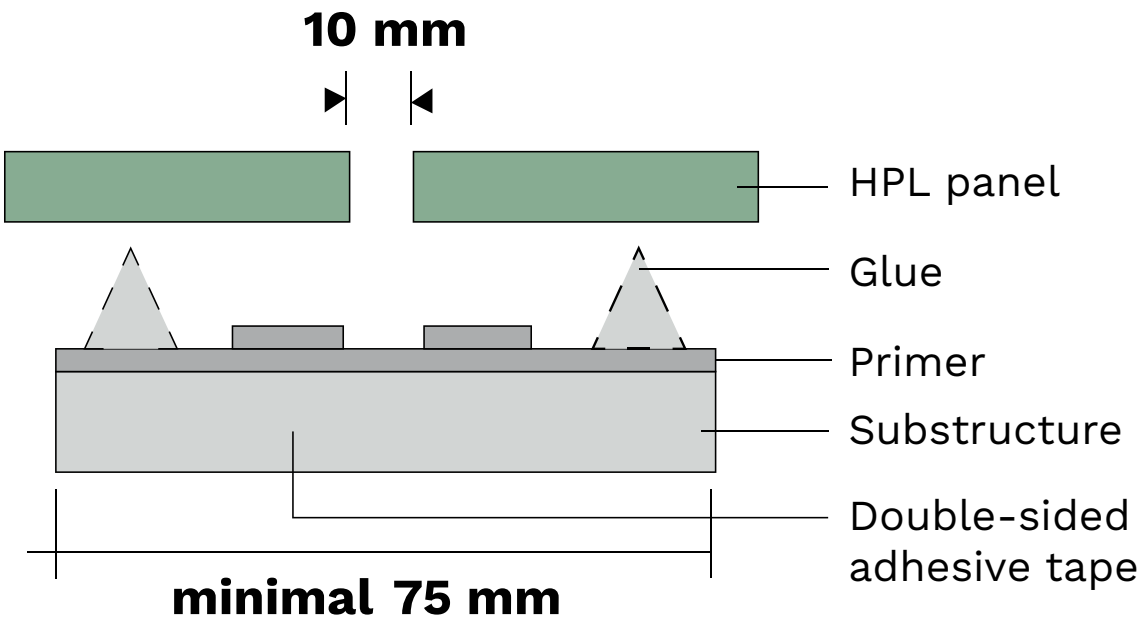
10 mm
HPL panel
Glue
Primer
Substructure
Double-sided
adhesive tape
minimal 75 mm

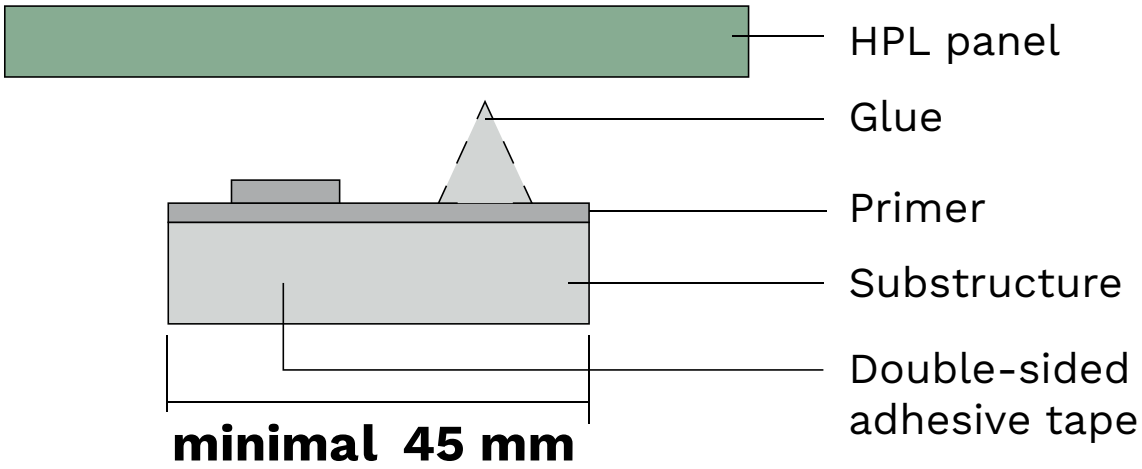
HPL panel
Glue
Primer
Substructure
Double-sided
adhesive tape
minimal 45 mm